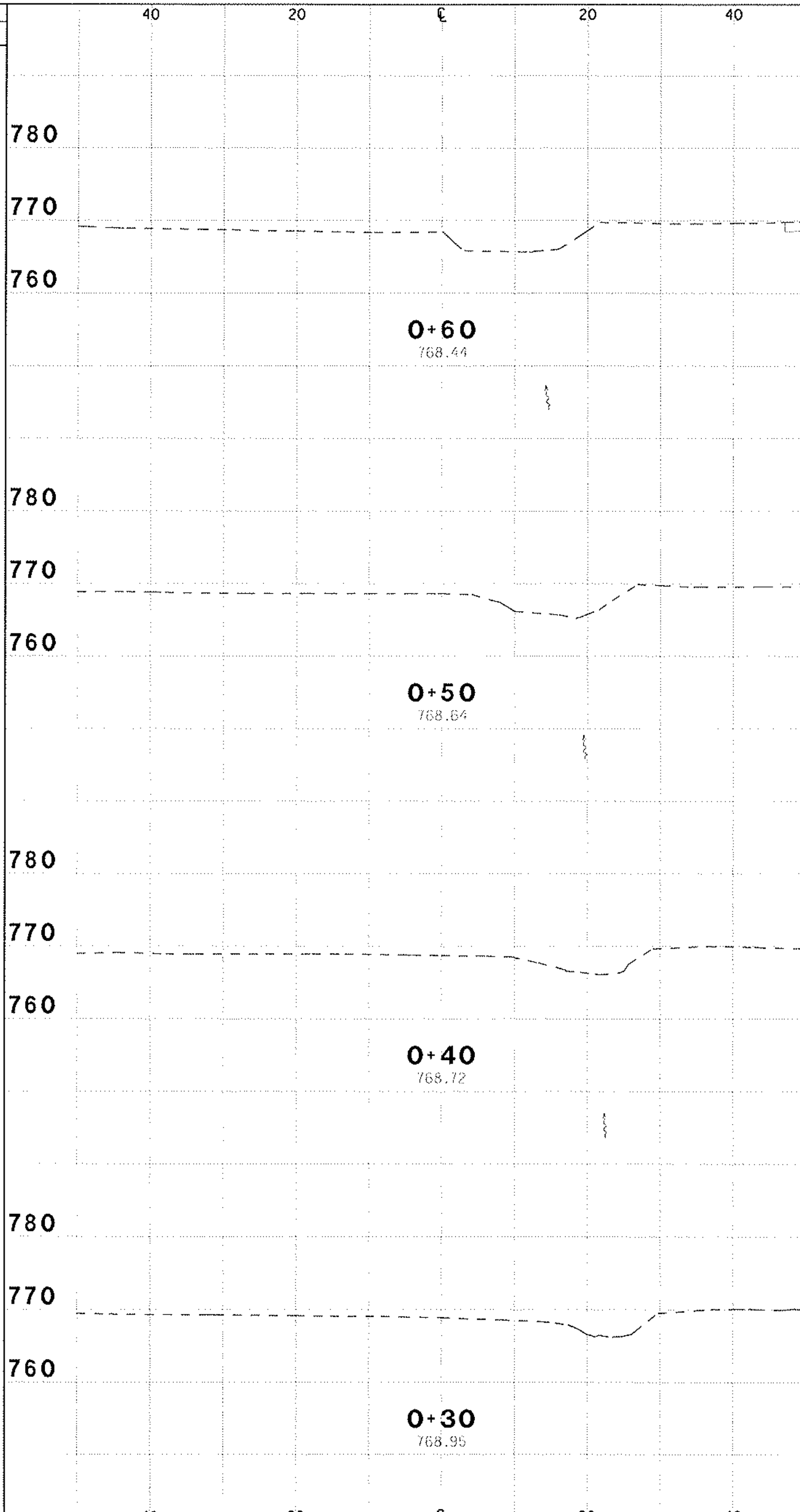

Station	Seeding End Width	Seeding Sq. Yds.	End Area Cut	End Area Fill	Volume Cut	Volume Fill
		0			0	0
0+60	0		0	0		
0+50						
0+40						
0+30						

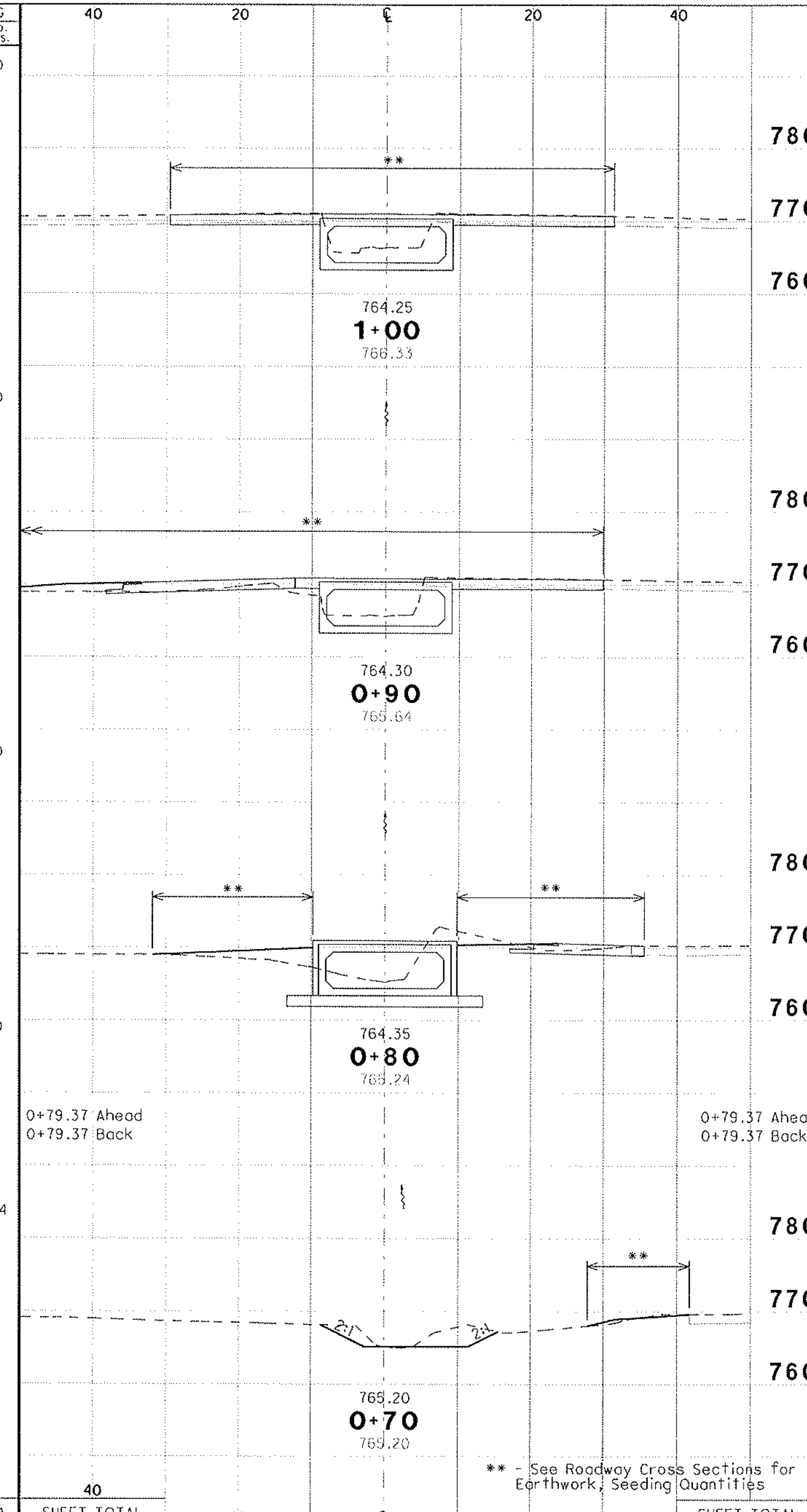

Station	Seeding End Width	Seeding Sq. Yds.	End Area Cut	End Area Fill	Volume Cut	Volume Fill
		0			0	0
1+00	0		0	0		
		0			0	0
0+90	0		0	0		
		0			0	0
0+80	0		0	0		
		0			0	0
0+79.37 Ahead	0		0	0		
0+79.37 Back	32		31	1		
		34			11	1
0+70	32		31	1		
SHEET TOTAL		34			11	1

CALCULATED JPH
CHECKED SWL

CHANNEL SECTIONS
STA. 0+30 TO STA. 1+00

HOC-328-2.70/5.93